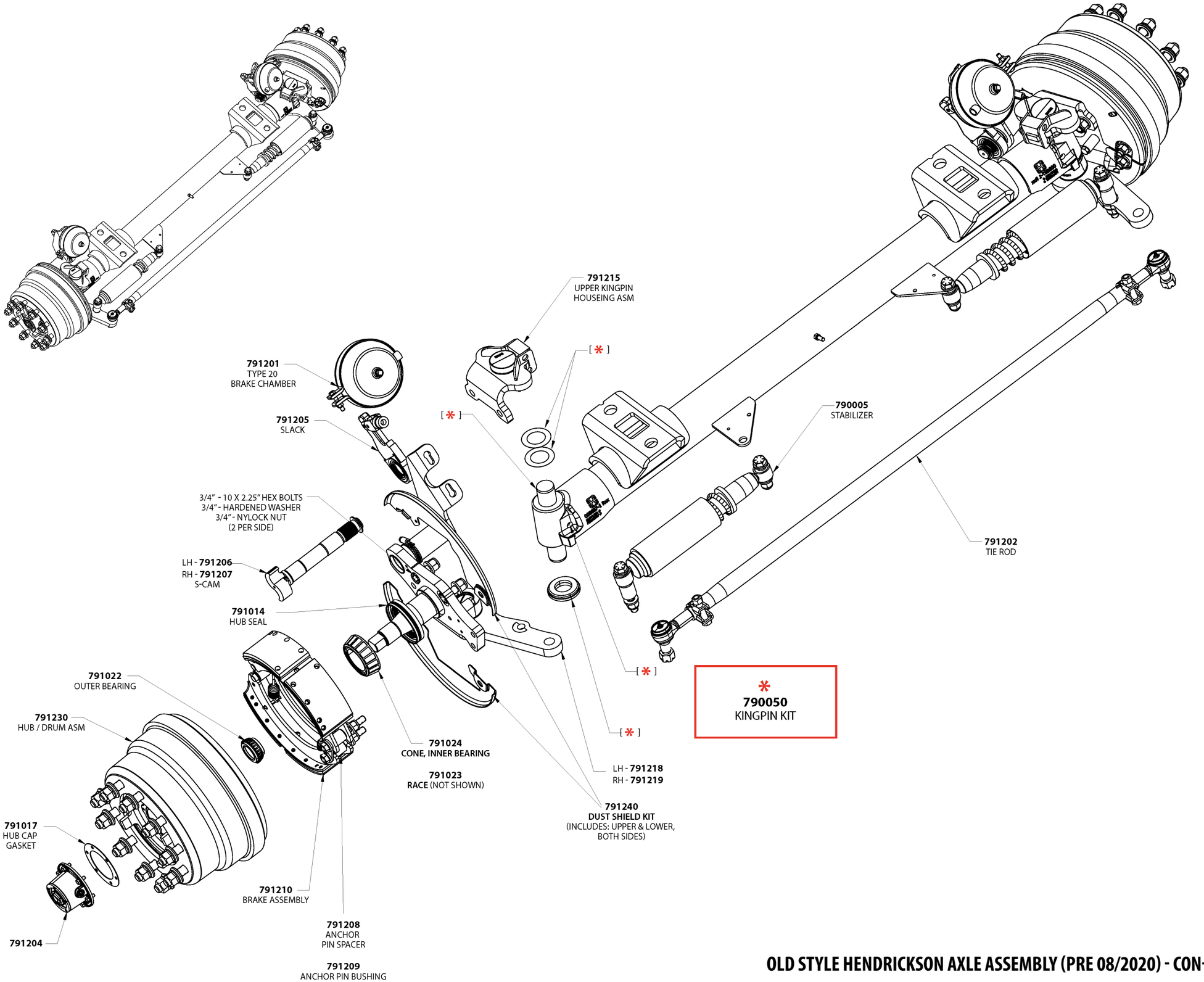

OLD STYLE HENDRICKSON AXLE ASSEMBLY (PRE 08/2020) - CON-TECH MANUFACTURING, INC.